Lightology

Logico Triple Nested Ceiling Light

SPEC # ART2767

DESIGNER M. De Lucchi & Reichert

BRAND Artemide

DESCRIPTION

The Logico Triple Nested Ceiling Mount features hand-blown organically shaped satin glass that seems to float in your space. Made in Italy.

Shown in: Gray / White

SHADE COLOR	White
BODY FINISH	Gray
WATTAGE	300W
DIMMER	Standard 120V
DIMENSIONS	26"W x 13.75"H
BULB NOT INCLUDED	
LAMP	3 x A19/Medium (E26)/100W/120V Incandescent 3 x A21/Medium (E26)/120V LED
SPEC #	ART2767

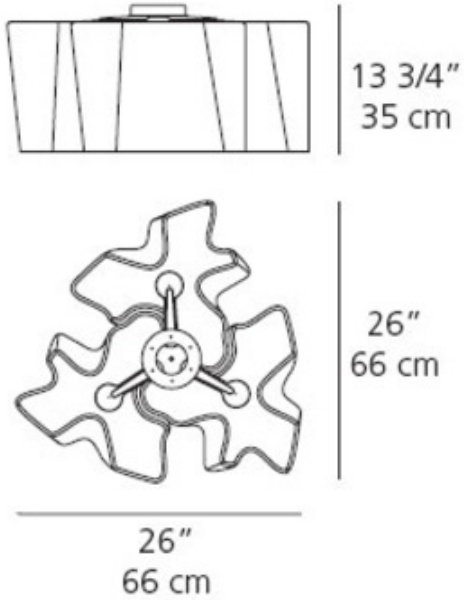

COMPANY	PROJECT	FIXTURE TYPE	APPROVED BY	DATE