Lightology

lightology.com
866-954-4489
07-30-26

Project:

Company:

Location: Fixture Type:

SPEC #: **EDG57703**

Approved On: Approved By:

Stratus Outdoor RGB Linear Wall Grazer

By PureEdge Lighting

Description

The Stratus Linear Outdoor RGB Wall Grazer is a Non-IC rated fixture designed for use in recessed cove or surface mount applications for new residential, new commercial, and remodel. Lights textured walls up to 30 feet high. Available in 1 foot and 4 foot lengths in RGB (Red-Blue-Green) with field replaceable LED. Link multiple Stratus fixtures to create long runs. Included components: Wall mounting bracket, housing, joiner bracket, reflector, LED panel, one internal DMX power supply, and louver. Note: End caps and DMX controller sold separately.Feed fixture with 120-277VAC. Suitable for outdoor damp or covered locations. Product is built to order.

Shown in aluminum

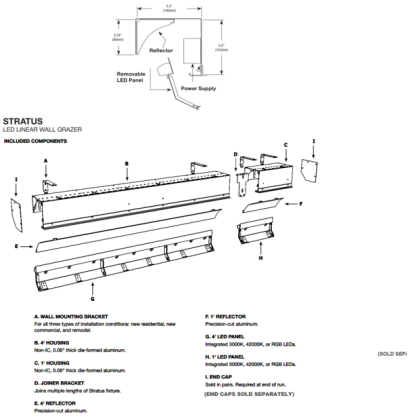

Specifications

COLOR	N/A
BODY FINISH	Aluminum
WATTAGE	15W
DIMMER	Dimmable
DIMENSIONS	12"L x 5.6"H x 5.5"D
INTEGRATED LED MODULE	1 x LED/15W/120-277V LED

Technical Information

LAMP LIFE	50000 hours

CLICK TO VIEW PRODUCT

Notes: