Lightology

Edge Wall / Ceiling Mount

SPEC # ART61996

BRAND Artemide

DESCRIPTION

Edge wall/ceiling mount features a white thermoplastic diffuser and a thermoplastic resin ceiling rose. The Edge is self-ballasted for fluorescent lamping only. One 23 watt, 120 volt, T4 medium base quad tube compact fluorescent lamp not included. General light distribution. UL listed. 19.25 inch width x 17.38 inch depth.

SHADE COLOR	N/A
BODY FINISH	White
WATTAGE	20W
DIMMER	N/A
DIMENSIONS	11.75"W x 13"H
BULB NOT INCLUDED	
LAMP	1 x CF/Medium (E26)/20W/120V Compact Fluorescent

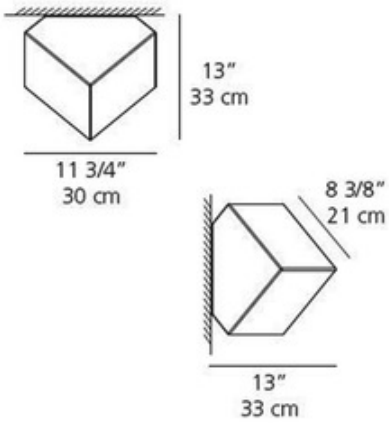

SPEC # ART61996

COMPANY	PROJECT	FIXTURE TYPE	APPROVED BY	DATE