Lightology

Tellium Freejack Head

SPEC # TLG62292

DESIGNER Sean Lavin

BRAND Visual Comfort Modern

DESCRIPTION

The Tellium Freejack Head combines simplicity with functional technology. Light direction can be adjusted using the 360 degree head rotation and 90 degree pivot, and the LED option includes lenses for 20, 40 and 60 degree beam spreads. This light is perfect for residential and commercial applications including galleries and retail stores. Dimmable with an ELV or MLV dimmer, depending on the system transformer. The LED option is Title 24 compliant. The Aged Brass is a living finish that will patina over time. If it becomes uneven or spotty, a brass cleaner can restore the finish. Notes: Requires a Freejack canopy or 1-circuit monorail track system, sold separately. The Aged Brass finish is not available for some size and lamping options.

Shown in: Satin Nickel

SHADE COLOR	N/A
BODY FINISH	Satin Nickel
WATTAGE	7W
DIMMER	N/A
DIMENSIONS	2.3"W x 3"H x 3.8"D
BULB NOT INCLUDED	
LAMP	1 x MR16/GU5.3 (bipin)/7W/12V LED

Technical Information

BEAM SPREAD	Adjustable

SPEC #	TLG62292

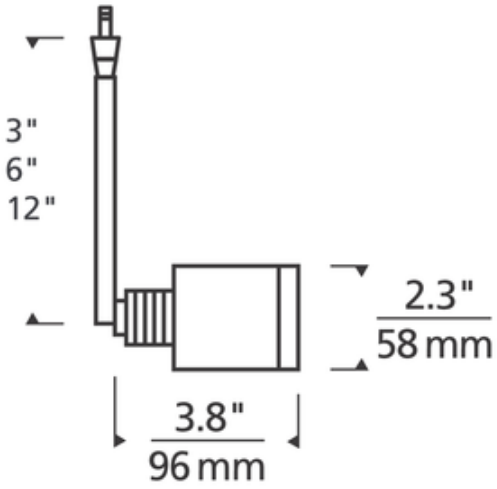

COMPANY	PROJECT	FIXTURE TYPE	APPROVED BY	DATE