Lightology

5556 Round Adjustable Pendant

SPEC # HLK78933

BRAND Holtkoetter

DESCRIPTION

556 Round Adjustable Pendant features a counter weight for height adjustment with finish available in Hand Brushed Old Bronze or Satin Nickel. Glass options include Satin White, Satin White Large, Morning Star, Krystall Ellipse, Krystall Round, Krystall Square, Berchtesgaden, Sunset, Salzberg, Hammered Silver and Hammered Gold. Includes six 20 watt halogen bipin lamps and 175 watt transformer. 21.5 inch diameter x 43.5 inches high. 10.5 inch diameter canopy. Dimmable with a low voltage electronic dimmer. UL listed.

SHADE COLOR	Sunset
BODY FINISH	Satin Nickel
WATTAGE	120W
DIMMER	Low Voltage Electronic
DIMENSIONS	21.5"W x 43.5"H
BULB INCLUDED	
LAMP	6 x JC/GY6.35 (bipin)/20W/12V Halogen
Technical Information	
LUMINOUS FLUX	290 lumens
LUMENS/WATT	14.50
LAMP LIFE	4000 hours
SPEC #	HLK78933

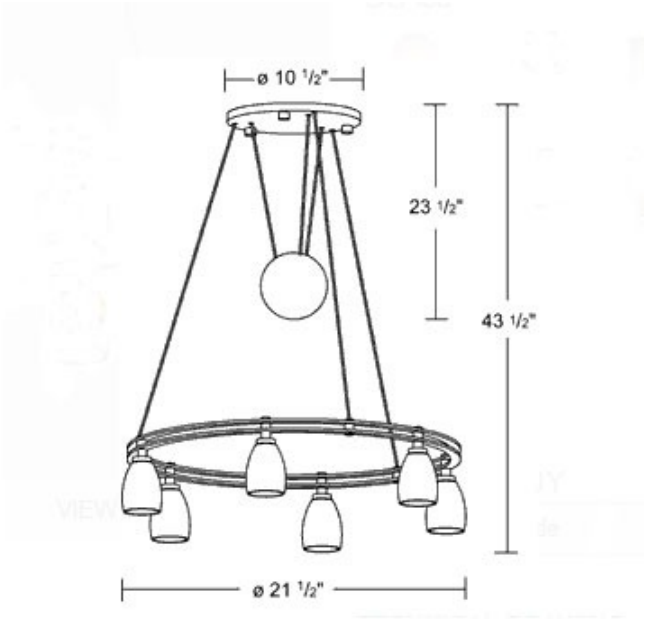

COMPANY	PROJECT	FIXTURE TYPE	APPROVED BY	DATE